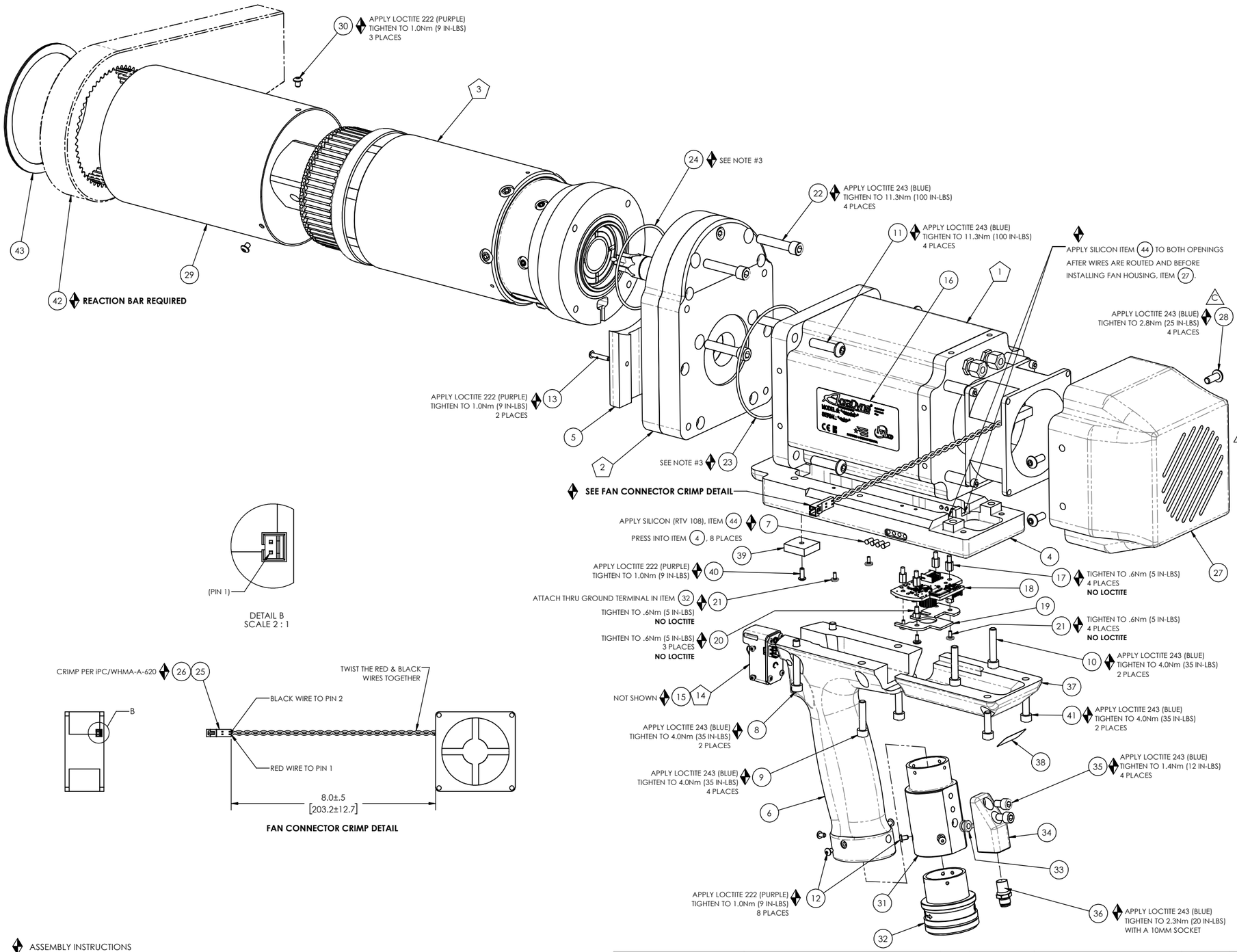

DETAIL B
SCALE 2 : 1

FAN CONNECTOR CRIMP DETAIL

COMMENTS	ITEM NO.	PART NUMBER	QTY.	DESCRIPTION
	1	31452	1	MOTOR/FAN SUB-ASM., 12K Nm
	2	31536	1	OFFSET GEARBOX ASSEMBLY, 8100NM
	3	31540	1	GEARBOX/CLUTCH ASM., 8100Nm
	4	31367	1	MOUNTING BLOCK, PISTOL HANDLE
	5	31533	1	TRANSDUCER WIRE COVER, 8100 Nm
	6	26275	1	HANDLE, PISTOL
	7	31411	8	LIGHTPIPE, LED, PANEL MOUNT, CONVEX, .250" LENGTH
	8	31621	2	SCREW, SHC 10-32 X 1-3/8, STEEL, BLACK OXIDE
	9	26789	2	SCREW, SHC, 10-32 x 7/8, STEEL, BLACK OXIDE
	10	29709	2	SCREW, SHC, 10-32 x 1, STEEL, BLACK OXIDE
	11	28238	4	SCREW, BHCS 1/4-28 x 1, STEEL, BLACK OXIDE
	12	25745	8	SCREW, BHSC 4-40 STEEL, BLACK OXIDE
	13	25131	2	SCREW, BHSC 4-40 X 5/8, BLK OXIDE
	14	25212	1	SWITCH SUB-ASSEMBLY
NOT SHOWN	15	26526	1	HT TOOL TRIGGER CABLE
	16	31317	1	LABEL, MODEL, SERIAL NUMBER AND DESCRIPTION
	17	25574	4	STANDOFF M-F,4-40x1/4,3/16 HEX, SS
	18	27785	1	TID BOARD, POPULATED W/O AMP CIRCUIT
	19	29336	1	TID BOARD WIRE INSULATOR
	20	29337	3	STANDOFF, M-F,4-40 X 1/8, SS
	21	25573	6	SCREW PHP 4-40 X 3/16 18-8 SS
	22	25340	4	SCREW, SHC 1/4-20 X 1.25, STEEL, BLACK OXIDE
	23	27953	1	O-RING, 70 DURO BUNA N, -042
	24	26487	1	O-RING, LED COVER
	25	30734	1	CONNECTOR, 2 POS, MALE PINS, MOLEX 70107-0001
NOT SHOWN	26	30738	2	CRIMP TERMINAL, CONNECTOR, MALE 22-24 AWG
	27	31496	1	FAN HOUSING, 80mm X 38mm FAN, 12,000Nm TOOL
	28	32286	4	SCREW, BHSC 10-32 X .50, STAINLESS STEEL, BLACK OXIDE
	29	26636	1	GEAR CASE COVER
	30	26319	3	SCREW, BHSC 6-32 X .188, 18-8 SS
	31	29283	1	CONNECTOR ADAPTOR, FAN
	32	31498	1	TOOL CONNECTOR ASM., PISTOL, 12,000Nm
	33	28265	1	GROMMET, 5/32" I.D. FOR 1/8" PANEL
	34	28266	1	CABLE COVER, FAN
	35	29918	2	SCREW, SHC, 10-32 x 5/16, STEEL, BLACK OXIDE
	36	31417	1	MALE RECEPTACLE CABLE ASSY, 3-PIN, 6.56FT, 2-PIN CONNECTOR
	37	31396	1	TRAY, WIRE, PISTOL HANDLE
	38	22141	1	SAFETY LABEL
	39	31399	1	FILLER, PISTOL TRIGGER
	40	25457	1	SCREW, BHSC 4-40, STEEL, BLACK OXIDE
	41	25168	2	SCREW, SHC, 10-32 x 5/8, STEEL, BLACK OXIDE
	42	26899	1	CHOOSE REACTION BAR
	43	26436	1	RETAINING RING, SPIRAL, Ø3.833 X Ø3.293 X .111
NOT SHOWN	44	24177	A/R	CLEAR SILICON, RTV 108
NOT SHOWN	45	24263	A/R	KAPTON TAPE, 1/2"
NOT SHOWN	46	28525	1	CABLE ASM., I/O ADAPTOR TO 3-SKT FEMALE CONN.

ASSEMBLY INSTRUCTIONS

SUB-ASSEMBLY

1) GEARS & SPLINES: LUBRICATE WITH DOW CORNING MOLYKOTE BR2 PLUS GREASE.

2) BEARINGS: LUBRICATE WITH CHEVRON SR1 GREASE

3) O-RINGS: LUBRICATE WITH O-RING LUBE

AIMCO
AcraDyne
10000 SE PINE STREET
PORTLAND, OREGON 97216
503.254.6600

DOCUMENT CONTROL
PRINTED COPIES OF THIS DOCUMENT ARE CONSIDERED TO BE UNCONTROLLED DOCUMENTS. HOLDERS ARE RESPONSIBLE FOR VERIFYING THE CURRENT REVISION LEVEL WITH PURCHASING OR ENGINEERING PRIOR TO USE OR FABRICATION. THE CONTROLLED VERSION OF THIS DOCUMENT IS ELECTRONICALLY MAINTAINED.

PROPRIETARY AND CONFIDENTIAL
THIS DRAWING CONTAINS INFORMATION STRICTLY CONFIDENTIAL TO ACRADYNE/AIMCO. IN THE ABSENCE OF EXPRESSED WRITTEN PERMISSION, ACRADYNE/AIMCO HAS LOANED THIS COPY WITH THE MUTUAL UNDERSTANDING THAT (A) IT WILL NOT BE USED FOR ANY PURPOSE OTHER THAN FOR THAT IN WHICH IT WAS PROVIDED, (B) THE DATA CONTAINED HEREIN WILL NOT BE DISCLOSED TO OTHERS, (C) IT WILL NOT BE REPRODUCED, AND (D) IT WILL BE RETURNED TO ACRADYNE/AIMCO IMMEDIATELY UPON DEMAND.

REVISION LEVEL	REVISION RELEASE DATE	DESCRIPTION OF CHANGES MADE TO PART	ECN #	AUTHOR/ APPROVAL

REVISION BLOCK

UNLESS OTHERWISE SPECIFIED, DIMENSIONS ARE IN INCHES
DIMENSIONS AND TOLERANCING PER ANSI Y14.5
SURFACE ROUGHNESS PER ANSI Y14.36

BLOCK TOLERANCING PER DECIMAL:
.X = ±.030 .XX = ±.010 .XXX = ±.005 .XXXX = ±.0005
ANGLE = ±0° 30'

REMOVE BURRS AND SHARP EDGES: R.015 MAX
MACHINE SURFACE FINISH: 125 RMS OR BETTER

DRAWINGS AND TECHNICAL DOCUMENTS CONTROLLED BY:
ACRADYNE MECHANICAL ENGINEERING

PISTOL HANDLE NUTRUNNER, W/SLIPRING CLUTCH AND FAN KIT, 8100Nm

XDHT SERIES

SIZE	PART / DRAWING NUMBER	REVISION
D	AEP4W998100B	C

SCALE 2:3 | DO NOT SCALE DRAWING | SHEET 1 OF 2

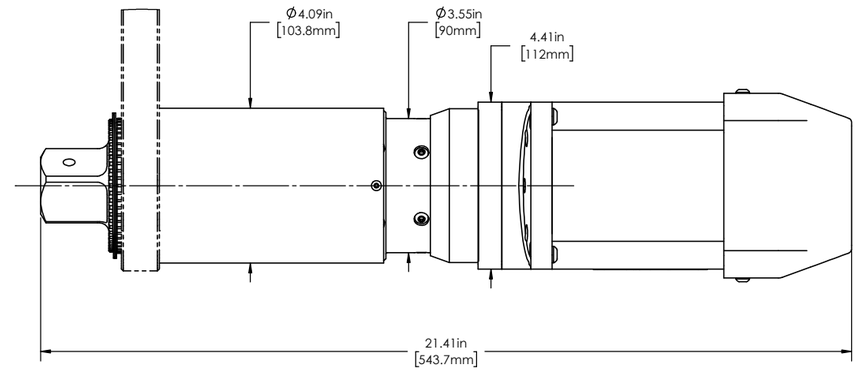

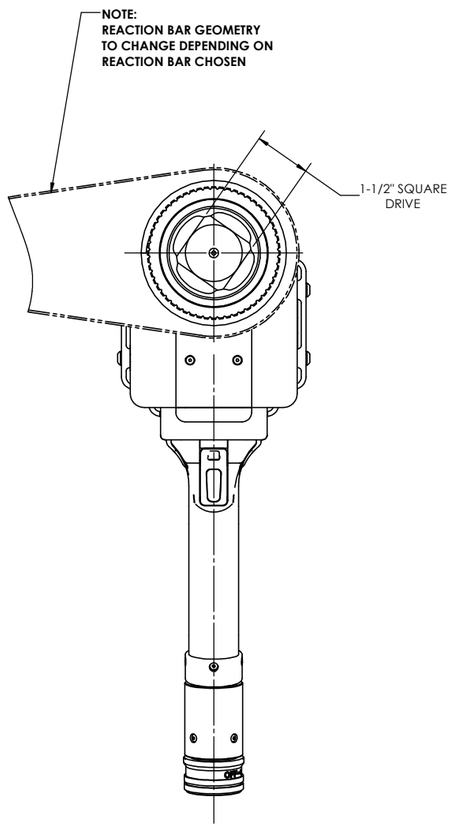

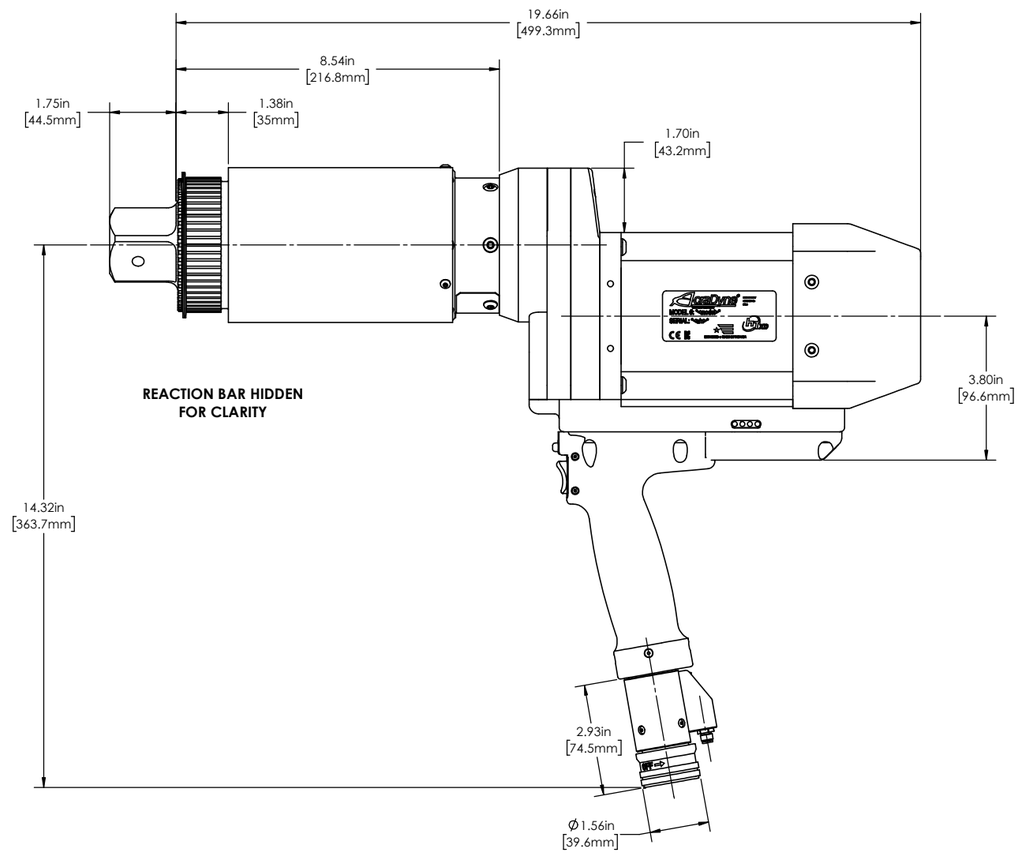

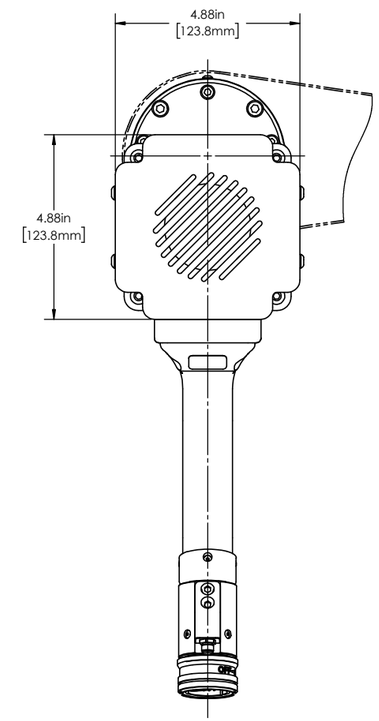

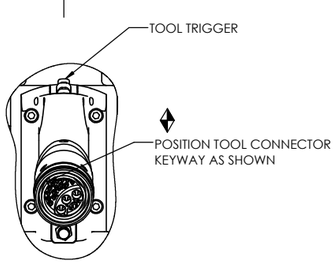

AIMCO
AcraDyne
10000 SE PINE STREET
PORTLAND, OREGON 97216
503.254.6600

DOCUMENT CONTROL

PRINTED COPIES OF THIS DOCUMENT ARE CONSIDERED TO BE UNCONTROLLED DOCUMENTS. HOLDERS ARE RESPONSIBLE FOR VERIFYING THE CURRENT REVISION LEVEL WITH PURCHASING OR ENGINEERING PRIOR TO USE OR FABRICATION. THE CONTROLLED VERSION OF THIS DOCUMENT IS ELECTRONICALLY MAINTAINED.

PROPRIETARY AND CONFIDENTIAL

THIS DRAWING CONTAINS INFORMATION STRICTLY CONFIDENTIAL TO ACRADYNE/AIMCO. IN THE ABSENCE OF EXPRESSED WRITTEN PERMISSION, ACRADYNE/AIMCO HAS LOANED THIS COPY WITH THE MUTUAL UNDERSTANDING THAT (A) IT WILL NOT BE USED FOR ANY PURPOSE OTHER THAN FOR THAT IN WHICH IT WAS PROVIDED, (B) THE DATA CONTAINED HEREIN WILL NOT BE DISCLOSED TO OTHERS, (C) IT WILL NOT BE REPRODUCED, AND (D) IT WILL BE RETURNED TO ACRADYNE/AIMCO IMMEDIATELY UPON DEMAND.

REVISION LEVEL	REVISION RELEASE DATE	DESCRIPTION OF CHANGES MADE TO PART	ECN #	AUTHOR/ APPROVAL

REVISION BLOCK

UNLESS OTHERWISE SPECIFIED, DIMENSIONS ARE IN INCHES
DIMENSIONS AND TOLERANCING PER ANSI Y14.5
SURFACE ROUGHNESS PER ANSI Y14.36

BLOCK TOLERANCING PER DECIMAL:
.X = ±.030 .XX = ±.010 .XXX = ±.005 .XXXX = ±.0005
ANGLE = ±0° 30'

REMOVE BURRS AND SHARP EDGES: R.015 MAX
MACHINE SURFACE FINISH: 125 RMS OR BETTER

DRAWINGS AND TECHNICAL DOCUMENTS CONTROLLED BY:
ACRADYNE MECHANICAL ENGINEERING

PISTOL HANDLE NUTRUNNER, W/SLIPRING CLUTCH AND FAN KIT, 8100Nm

XDHT SERIES

SIZE	PART / DRAWING NUMBER	REVISION
D	AEP4W998100B	C
SCALE 1:2	DO NOT SCALE DRAWING	SHEET 2 OF 2