UL-80 SERIES OIL-PULSE WRENCHES

EXPLODED VIEW

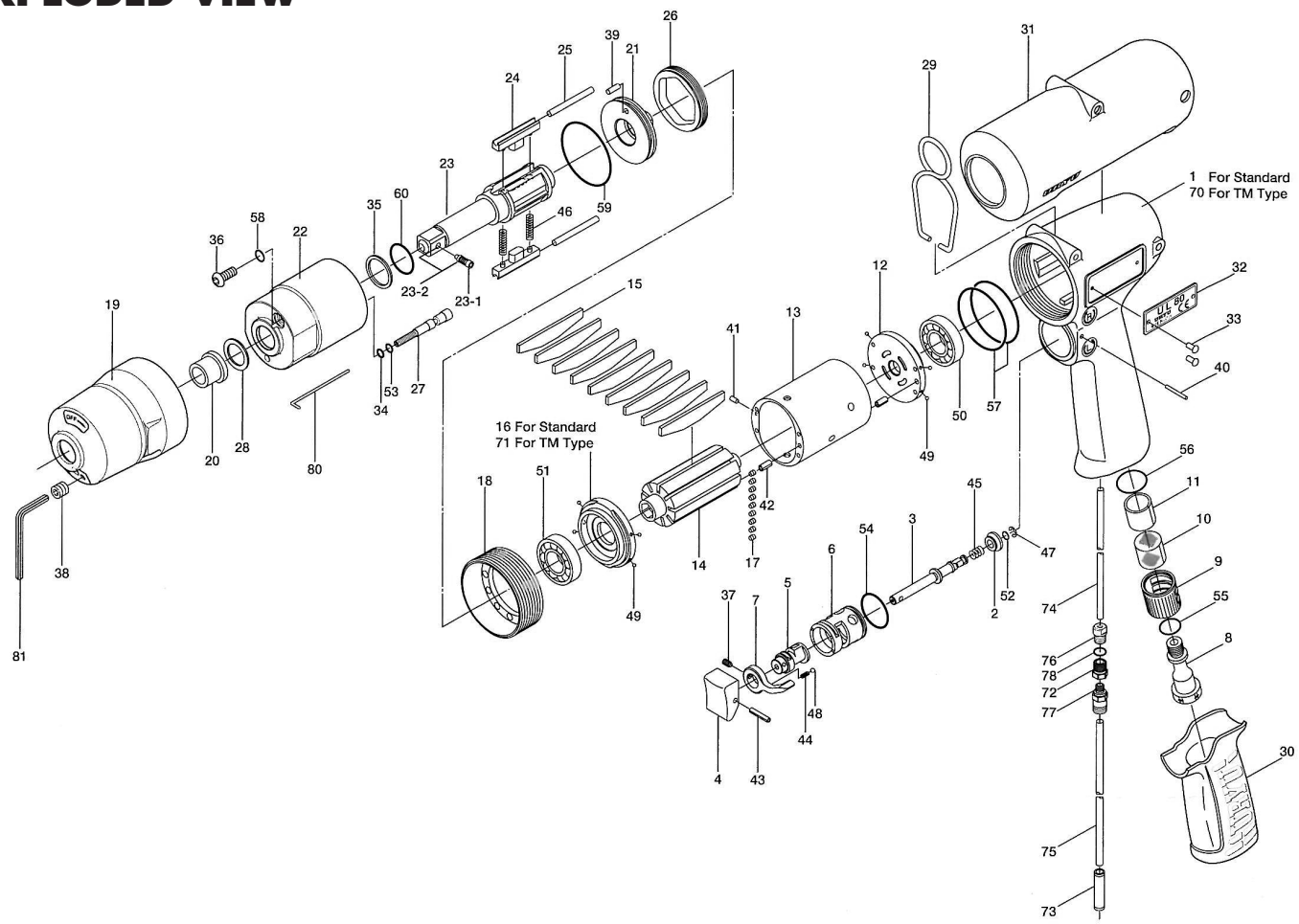

PARTS LIST — FOR REFERENCE ONLY

Index Number	Part Number	Description	Qty.
1	117-025-2	Handle	1
2	147-100-3	Valve	1
3	147-104-2	Valve Rod	1
4	147-107-2	Valve Lever	1
5	147-210-2	Reverse Valve	1
6	147-211-2	Reverse Valve Bushing	1
7	09B-212-5	Reverse Lever	1
8	147-091-2	Air Inlet Bushing	1
9	147-780-3	Exhaust Stack	1
10	147-042-2	Silencer	1
11	147-835-3	Filter (K200)	1
12	117-285-2	Rear Plate	1
13	117-286-2	Cylinder	1
14	115-287-3	Rotor	1
15	115-288-3	Blade	9
16	115-289-3	Front Plate	1
17	147-064-6	Plug	9
18	115-036-3	Hammer Casing Connector	1
19	115-439-3	Front Casing	1
20	190-328-6	Anvil Bushing	1
21	117-901-2	Rear Liner Plate	1
22	117-902-2	Liner	1
23	117-319-2	Anvil	1
23-1	891-300-0	Socket Retainer Pin Assembly	1
23-2	891-567-1	Anvil Assembly (P)	1

Index Number	Part Number	Description	Qty.
24	115-440-3	Driving Blade	2
25	147-974-8	Roller Pin (2.5 x 30)	2
26	115-906-3	Liner Casing Cover	1
27	143-970-9	Relief Valve	1
28	178-327-0	Anvil Front Spacer	1
29	174-790-0	Suspension Ring	1
30	147-842-2	Handle Cover	1
31	117-840-2	Casing Cover	1
32	117-924-2	Name Plate	1
33	930-205-0	Driver Rivet (No.0 x 2.6)	2
34	944-002-0	Supporting Ring (2.6 x 4.5 x 1)	1 ●
35	944-212-0	Supporting Ring (12 x 16 x 1.5)	1 ●
36	945-942-0	Hexagon Head Bolt (M4 x 6)	1
37	952-106-0	Hexagon Head Screw (M4 x 6)	1
38	966-099-0	Allen Head Plug (NPT1/16)	1
39	970-204-0	Pin (H) (3x6)	1
40	971-123-0	Pin (2 x 23)	1
41	973-006-0	Roll Pin (2 x 6)	1
42	973-008-0	Roll Pin (2 x 8)	2
43	973-014-0	Roll Pin (2 x 14)	1
44	976-006-0	Spring (3 x 5)	1
45	976-457-0	Spring (7 x 12)	1
46	976-811-0	Spring (3.7 x 31)	2 ●
47	979-405-0	Outer Snap Ring (E2.5)	1
48	981-002-0	Ball (1/8)	1

Index Number	Part Number	Description	Qty.
49	981-045-0	Ball (1.5 mm)	8
50	982-902-0	Ball Bearing (6901)	1
51	982-903-0	Ball Bearing (6902)	1
52	990-306-0	O Ring (ARP-568)	1
53	990-970-0	O Ring (SNS-2)	1 ●
54	990-912-0	O Ring (SNS-14)	1
55	990-914-0	ORing (SNS-16)	1
56	990-916-0	O Ring (SNS-18)	1
57	990-930-0	O Ring (SNS-40)	2
58	990-971-0	O Ring (SNS-3)	1 ●
59	990-981-0	O Ring (SNS-29)	1 ●
60	992-020-0	SURing (Q-12)	1 ●
PARTS FOR (TM) TYPE			
70	852-547-1	Handle (TM)	1
71	852-548-1	Front Plate (TM)	1
72	909-442-0	Connecting Screw	1
73	850-610-1	Quick Exhaust Connector	1
74	935-240-0	Polyurethane Hose	1
75	935-350-0	Polyurethane Hose (F-1504)	1
ACCESSORIES			
80	939-091 -0	Allen Wrench (1.5)	1
81	939-105-0	Allen Wrench (4)	1

FOOTNOTES

● = Parts in Pulse Repair Kit UL-80-PRK

AIMCO

10000 SE PINE
PORTLAND, OR 97216
503-254-6600
FAX 503-255-2615

When ordering spare parts, please specify tool type, part number, and description.