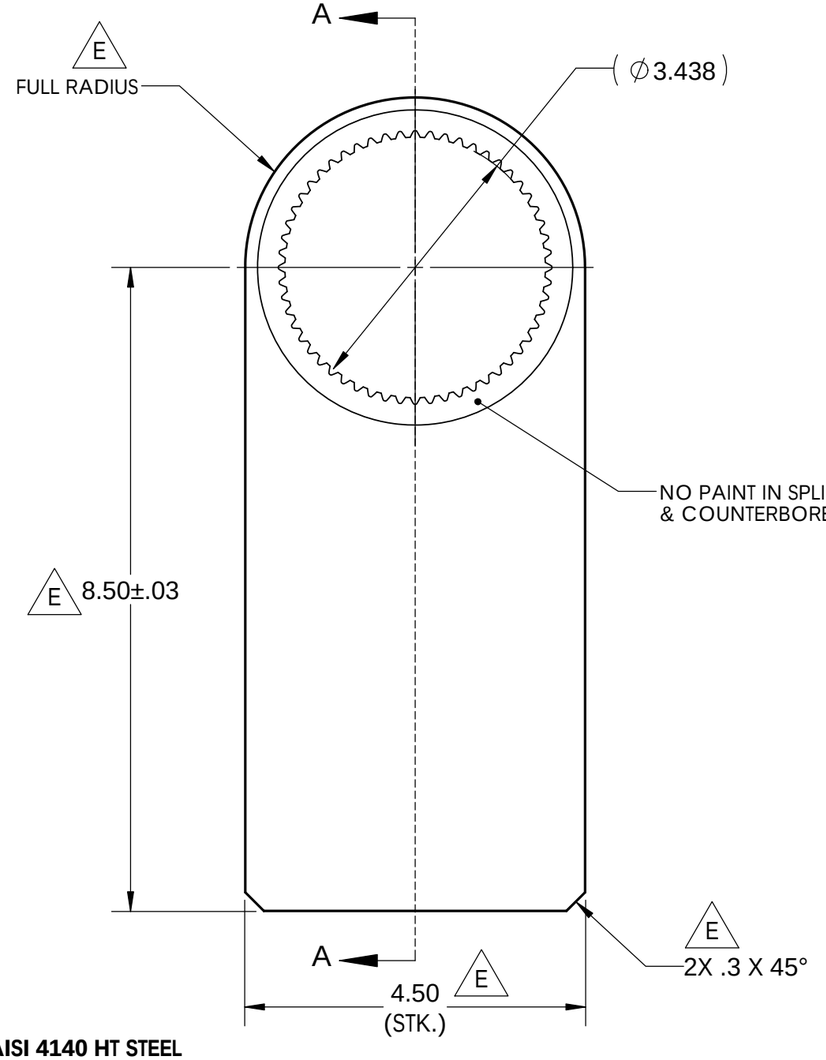

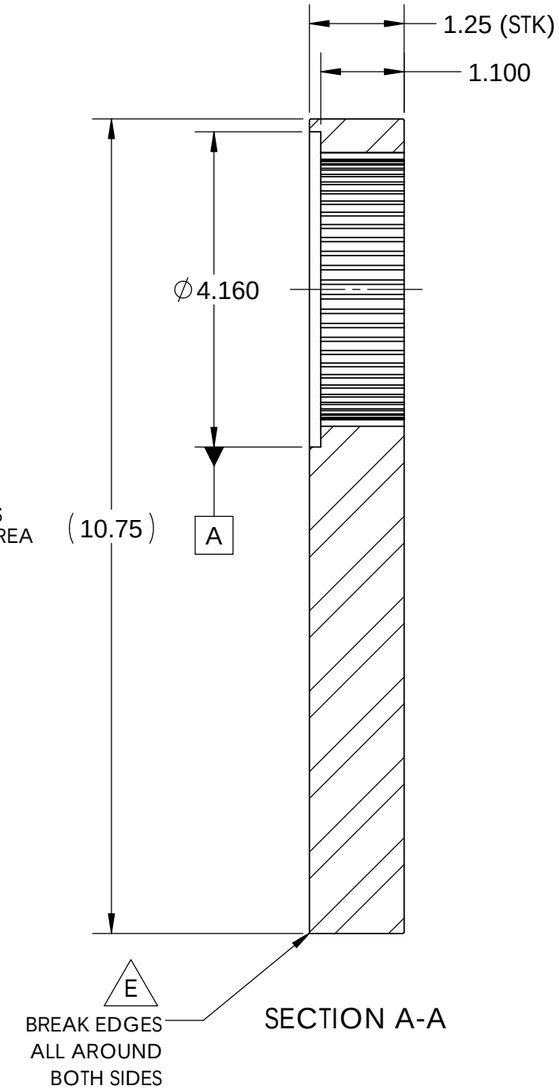

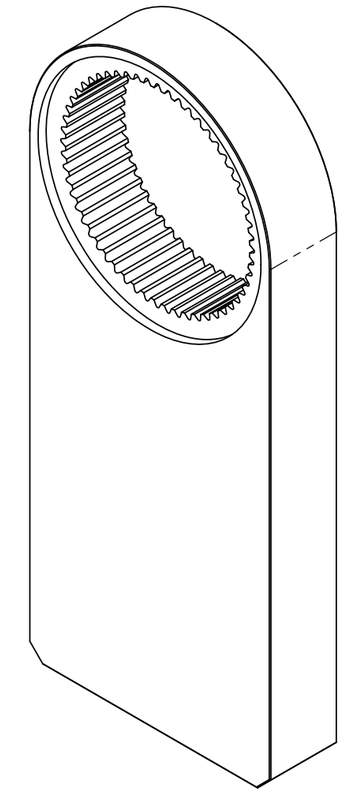

◎ .002 A

GEAR DATA TABLE	
DIAMETRAL PITCH:	16/32
PRESSURE ANGLE:	30
NUMBER OF TEETH:	56
PITCH Ø:	3.5000
MAJOR Ø (MAX):	3.6307
MINOR Ø (MAX):	3.4425
INSPECTION PIN Ø:	0.1080
DISTANCE BETWEEN PINS:	3.3538
	3.3501
ALL GEAR DIMENSIONS AND TOLERANCING PER ANSI B92.1	

E **MATERIAL: AISI 4140 HT STEEL**

E **HEAT TREAT: PRE-HEAT TREAT, 27-32 HRC REF.**

E **FINISH: PAINT OR POWDERCOAT OSHA YELLOW - MASK INTERNAL GEAR, SEE NOTE**

MATING PART: 26446

AIMCO
AcraDyne
A Division of AIMCO
10000 SE PINE STREET
PORTLAND, OREGON 97216
503.254.6600

DOCUMENT CONTROL
PRINTED COPIES OF THIS DOCUMENT ARE CONSIDERED TO BE UNCONTROLLED DOCUMENTS. HOLDERS ARE RESPONSIBLE FOR VERIFYING THE CURRENT REVISION LEVEL WITH PURCHASING OR ENGINEERING PRIOR TO USE OR FABRICATION. THE CONTROLLED VERSION OF THIS DOCUMENT IS ELECTRONICALLY MAINTAINED.

PROPRIETARY AND CONFIDENTIAL
THIS DRAWING CONTAINS INFORMATION STRICTLY CONFIDENTIAL TO ACRADYNE/AIMCO. IN THE ABSENCE OF EXPRESSED WRITTEN PERMISSION, ACRADYNE/AIMCO HAS LOANED THIS COPY WITH THE MUTUAL UNDERSTANDING THAT (A) IT WILL NOT BE USED FOR ANY PURPOSE OTHER THAN FOR THAT IN WHICH IT WAS PROVIDED, (B) THE DATA CONTAINED HEREIN WILL NOT BE DISCLOSED TO OTHERS, (C) IT WILL NOT BE REPRODUCED, AND (D) IT WILL BE RETURNED TO ACRADYNE/AIMCO IMMEDIATELY UPON DEMAND.

REVISION LEVEL	REVISION RELEASE DATE	DESCRIPTION OF CHANGES MADE TO PART	ECN #	AUTHOR/ APPROVAL

REVISION BLOCK

UNLESS OTHERWISE SPECIFIED, DIMENSIONS ARE IN INCHES
DIMENSIONS AND TOLERANCING PER ANSI Y14.5
SURFACE ROUGHNESS PER ANSI Y14.36

BLOCK TOLERANCING PER DECIMAL:
.X = ±.030 .XX = ±.020 .XXX = ±.005 .XXXX = ±.0005
ANGLE = ±0° 30'

REMOVE BURRS AND SHARP EDGES: R.015 MAX
MACHINE SURFACE FINISH: 125 RMS OR BETTER

DRAWINGS AND TECHNICAL DOCUMENTS CONTROLLED BY:
ACRADYNE MECHANICAL ENGINEERING

REACTION BAR, FLAT
8000 SERIES, 8900 TOOL MODELS

SIZE	PART / DRAWING NUMBER	REVISION
B	27255	E
SCALE 1:2	DO NOT SCALE DRAWING	SHEET 1 OF 1